Energy Conversion and Management 245 (2021) 114635

Contents lists available at ScienceDirect

Energy Conversion and Management

journal homepage: www.elsevier.com/locate/enconman

Conceptual design and comprehensive analysis for novel municipal sludge gasification-based hydrogen production via plasma gasifier

Huaqing Qi [a], Peizhe Cui [a], Zhiqiang Liu [b], Zaifeng Xu [a], Dong Yao [a], Yinglong Wang [a], Zhaoyou Zhu [a,*], Sheng Yang [b,*]

[a] College of Chemical Engineering, Qingdao University of Science and Technology, Qingdao 266042, People's Republic of China
[b] School of Energy Science and Engineering, Central South University, 932 Lushan South Road, Changsha 410083, People's Republic of China

ARTICLE INFO

Keywords:
Municipal sludge
Plasma gasification
Carbon capture
Chemical looping
Comprehensive analysis

ABSTRACT

Aiming to solve the problems of the environment and land occupied by municipal sludge incineration and landfill technology, novel processes of municipal sludge-to-H_2 by plasma gasification and municipal sludge-to-H_2 by plasma gasification coupled with synthetic chemical looping processes are proposed to convert municipal sludge into H_2 and achieve carbon capture. On the basis of the simulation results, the performance of the two processes was explored through a comprehensive analysis of the process exergy efficiency, economic benefits, and environmental impact. The results show that the novel processes have higher energy conversion and utilization efficiencies. Municipal sludge-to-H_2 by the plasma gasification process has notable advantages in production capacity, which is 21.22% higher than that of municipal sludge-to-H_2 by plasma gasification coupled with synthetic chemical looping process. However, its exergy efficiency and financial internal rate of return are 6.98% and 4.59%, respectively, which is lower than those of municipal sludge-to-H_2 by plasma gasification coupled with synthetic chemical looping. In addition, its total capital investment, global warming potential, and acidification potential are 5.73%, 58.14%, and 16.59% higher than municipal sludge-to-H_2 by plasma gasification coupled with synthetic chemical looping. The proposed processes provide promising methods for solving the problems of municipal sludge treatment and the profitable and environmentally sustainable development of municipal sludge into H_2.

1. Introduction

The shortage of energy and the aggravation of environmental pollution promote the improvement of energy efficiency, and the development of renewable energy has become an urgent need for the sustainable development of the social economy [1]. Hydrogen is an ideal energy carrier because of its light weight, high calorific value, and clean combustion. The use of hydrogen energy can alleviate to a large extent the unstable and discontinuous problems in renewable energy generation, which plays a crucial role in promoting the energy revolution strategy, adjusting the energy structure, and realizing sustainable energy development in China [2]. In recent years, urbanization has led to a continuous increase in municipal sludge [3]. Sludge production in China is expected to reach nearly 100 million tons by 2023. With the depletion of fossil fuels and the increasingly serious environmental pollution, the effective utilization of sludge has become the theme of energy development and focuses on energy-saving, low-cost sustainable solutions for sludge treatment and utilization [4].

Sludge is gradually used because it contains calorific value organics, which can be recovered as a resource. However, the industry continues to widely use incineration, landfill, and biological techniques to treat sludge, and reviews have mostly been about this aspect [5]. With the aim of reducing and recycling sludge and mitigating global warming, gasification technology is being rapidly developed [6]. Gasification technology uses dry sludge as fuel for the thermochemical process and significantly reduces the volume of waste by-products separated at the main treatment plant [7]. This method has become highly efficient in the treatment of sludge to produce valuable products.

Karbakhshravari et al. [8] confirmed the feasibility of recovering high-quality struvite from sewage sludge, which provided a basis for the resource utilization of sewage sludge. Striūgas et al. [9] investigated sludge gasification under experimental conditions and found that the technology could produce usable fuel and increase energy output. Lumley et al. [10] found that the gasification of sludge into fuel for

* Corresponding authors.
E-mail addresses: huagongyl@163.com (Z. Zhu), ceshyang@csu.edu.cn (S. Yang).

https://doi.org/10.1016/j.enconman.2021.114635
Received 4 June 2021; Accepted 10 August 2021
Available online 21 August 2021
0196-8904/© 2021 Elsevier Ltd. All rights reserved.

power generation could provide considerable economic value. Wang et al. [11] reported an example of treating printing and dyeing sludge by using a plasma gasifier, in which the carbon conversion efficiency and volume reduction ratio of sludge from gasification were 99.9% and 41.19%, respectively. Furthermore, the energy conversion efficiency and fixing efficiency of heavy metals in the solid products reached 71.8% and 99%, respectively.

The aforementioned reviews show that plasma gasification (PG) technology is one of the most effective and environmentally friendly methods for solid waste treatment and energy utilization [12]. In addition, PG eliminates toxic organic compounds, immobilizes heavy metals in inert slag, and produces syngas, which can be used in energy heat recovery and power generation systems [13]. Theoretically, the ideal result of waste-to-energy conversion is the direct conversion of sludge to energy [14]. Mazzoni et al. [15] compared the process of treating municipal solid waste (MSW) with different gasifiers; the results showed that the gas production rate with higher mole fractions of CO and H_2 in the plasma gasifier was higher than that in the entrained flow gasifier. Khuriati et al. [16] explored the efficiency of the PG of MSW with different gasification agents; the results showed that the efficiency of PG of MSW was the highest only when air was used as the gasification agent, which was 7% higher than that when steam was used as the gasification agent. Cho et al. [17] used a gasification-plasma hybrid system to treat high-density polyethylene; the results showed that the syngas yield could be increased by 10.8% and 7.91% by adding oxygen and a mixture of oxygen and steam, respectively. Minutillo et al. [18] explored using PG to treat refuse-derived fuel (RDF); the results showed that the system efficiency of this technology was 31% higher than that of traditional waste incineration technology. However, few studies have investigated the simulation of PG for sludge treatment. In addition, PG consumes a large amount of electric energy; thus, its economic cost is high. Therefore, a comprehensive analysis and evaluation are necessary of the energy, economics, and environment of the sludge PG.

Furthermore, the process of chemical looping can directly produce CO_2 for storage. Using this process avoids the high energy consumption of CO_2 capture, improves the energy conversion efficiency, and has been widely applied to combustion and gasification. Xiang et al. [19] proposed a coal-to-methanol process coupled with synthetic chemical looping (SCL). The carbon utilization rate of this process is 17.7% higher than that of the traditional process. Process complexity was substantially reduced, and it has substantial development prospects in terms of economic benefits. Zhou et al. [20] compared SCL and the traditional process; the results showed that the exergy efficiency of the former was 21% higher than that of the latter and that the CO_2 emission of the former was 15% less than that of the latter. Darmawan et al. [21] proposed a black liquor-based hydrogen process that adopted SCL to reduce energy loss; satisfactory results were obtained for the energy utilization efficiency and carbon capture rate. Hsieh et al. [22] introduced a pilot plant for the production of high-purity hydrogen using SCL. Through a comparison of the experiment and simulation, the scalability and feasibility of SCL were successfully proved. The aforementioned studies show that SCL is a promising process for improving process efficiency and efficient CO_2 capture [23]. The promotion of sludge into energy is a research direction. Some studies have assessed the treatment of MSW and RDF using PG technology, but many are limited to experimental research on the gasification stage. Few reports on the PG technology of municipal sludge and its subsequent chemical production process are in the literature.

In this work, a novel process of municipal sludge-to-H_2 by plasma gasification (MSTH) with air as the gasification agent was proposed. The aim of the process was to treat the municipal sludge that had a complex composition and could cause serious harm into a harmless product and for resource utilization of solid waste treatment. In addition, another novel process of municipal sludge-to-H_2 by plasma gasification coupled with synthetic chemical looping (MSTHCWSCL) is proposed to further reduce the complexity of the process and improve the efficiency of CO_2 capture and exergy. The performance of the two processes was further explored by a comprehensive analysis of the process economy, exergy efficiency, and carbon capture efficiency.

2. Process description and methods

In this study, Aspen Plus V11 was used to simulate MSTH and MSTHCWSCL. The developed plasma reactor model was based on a DC non-transferred plasma torch operating in an adiabatic environment. The Peng-Robinson equation of state with Boston-Mathias modifications was selected as the thermodynamic method for modeling the PG process.

2.1. Municipal sludge-to-H_2 by plasma gasification process

MSTH comprises four basic units: municipal sludge PG unit, water–gas shift unit (WGS), acid gas removal unit (AGR), and pressure swing adsorption unit (PSA). The flowsheet of MSTH is shown in Fig. 1. The physical property methods and key parameters of each unit of the process are listed in Table 1.

2.1.1. Plasma gasification

Plasma gasifiers have the advantages of high enthalpy value, high reactive activity, and good controllability, which opens up a new method for solid waste treatment. This has important practical significance for realizing sustainable economic development. It can be divided into drying and pyrolysis zone, gasification zone, melt zone (Fig. 2). Under high-temperature conditions, inorganic components in solid waste melt and form a vitreous after quenching and curing, which can be used as building materials [24]. Organic components are decomposed into syngas, used as a high-quality fuel and in the chemical synthesis industry [25].

Plasma technology is widely used in mechanical processing, metallurgy, chemical industry, and surface treatment [26]. Regarding solid waste treatment, research on PG technology is also improving. Some researchers have studied biomass gasification using a plasma gasifier. Therefore, in this study, using chemical process simulation software, PG with municipal sludge as the raw material was simulated. The key data analyses are presented in Table 2.

Because the gasification temperature is sufficiently high, the equilibrium condition of the gasification reaction can be satisfied. Therefore, this work used Ryield and RGibbs modules as the gasifier model for MSTH, according to the minimization of the Gibbs free energy. The process modeling is shown in Fig. 3. To balance the robustness, operability, and available information of the model, the following assumptions were made: [28]

(1) During the reaction process, the reactor is considered to be zero-dimension, and all equipment maintained steady operation.
(2) C, H, O, N and S elements are used to represent the sewage sludge.
(3) The O, H, S, and N elements in the municipal sludge were all converted to the gas phase.
(4) Ash in the municipal sludge is regarded as an inert substance, which does not participate in the gasification process and has no effect on the reaction process and results
(5) Inorganic matters in the material are all inert.
(6) Tar is negligible due to high reaction temperature, and char is in form of solid carbon.

Municipal sludge (FEED1) was preheated by HEATER1 and then fed into the plasma gasifier. Based on the reaction temperature curve of the plasma gasifier, the gasifier was divided into two reaction zones: a high-temperature reactor (HTR) and a low-temperature reactor (LTR), according to the proximate and ultimate analyses, combined with the relevant data and experimental results of PG. The gas composition considered comprised H_2, CO, CO_2, CH_4, H_2O, N_2, H_2S, SO_2, SO_3, O_2, C, and ash; this study did not consider tar content. In the DECOMP, the

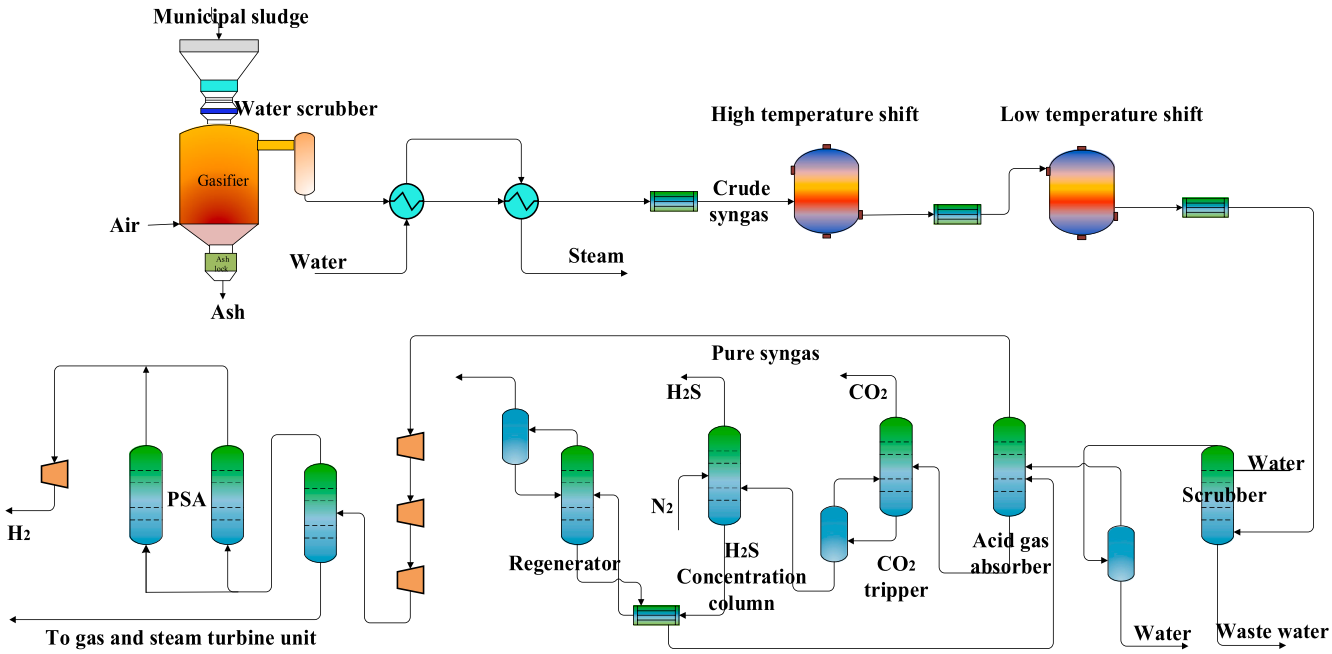

Fig. 1. Flowsheet of MSTH.

Table 1
Specification of MSTH.

Unit	Property method	Main model	Key parameter
PG	PR-BM	Ryield and RGibbs	Plasma gasification; m (municipal sludge) = 15 t/h; m(O_2) = 28160 m^3/h; P = 3 MPa; T: 500-2500℃
WGS	RK-Soave	RPlug	P = 3 MPa; Mole ratio of H_2/CO: 3.0–3.3
AGR	PC-SAFT	RadFrac	P = 3.8 MPa; T = -50℃
PSA	Peng-Robinson	Sep	Split fraction of H_2, CO, CO_2, N_2, is 1, 0, 0.02, 0.02 respectively

Table 2
Proximate analysis and ultimate analysis of municipal sludge (air-dried basis, wt %) [27].

Proximate analysis (wt. %)		Ultimate analysis (wt. %)	
Moisture	4.0	C	40.05
Volatile matter	51.1	H	5.15
Fixed carbon	13.9	O	16.27
Ash	31.0	N	5.85
		Cl	0.13
		S	1.55

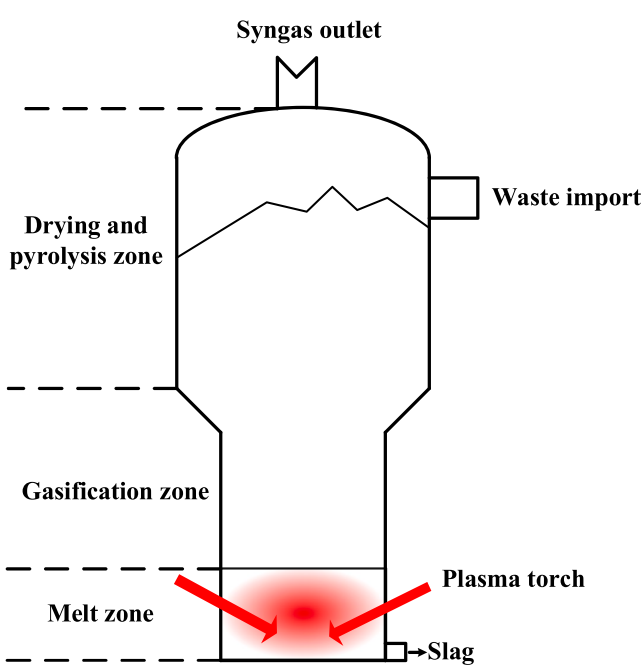

Fig. 2. Plasma gasifier working principle diagram.

municipal sludge was decomposed at a higher temperature to obtain gasified gas and ash. Further decomposition heat (Q) must be introduced into the gasification module to ensure the energy balance of the reaction process. The decomposed G-GAS1 enters the separation module with C, H_2, O_2, N_2, Cl_2, S, and ash, and 85% moisture is separated. G-GAS2 enters the HTR, together with the air gasification agent PLAS-GAS. Among them, the plasma torch is simulated by HEATER1, and ash is modeled as an inert, non-reactive solid stream. The HTR temperature was ensured to be approximately 2500 °C by iterating the plasma gas flow rate. The product SYNGAS1 was obtained by reaction, and ash was separated after cooling by HEATER2. SYNGAS2 entered the LTR and simulated the low-temperature gasification reaction based on the low-temperature zone in the plasma reactor. The product SYNGAS3 was further obtained and mixed with the previously evaporated moisture to obtain crude syngas through the washing column. The simulation results are presented in Table 3. There were some differences in CO_2 content due to the different raw materials used in the experiment. A higher reaction temperature can promote the endothermic reaction so that more carbon can be converted into gaseous products. In the single-sludge gasification simulation process, more oxidants are required to increase the gasification temperature. Therefore, the content of CO and H_2 will increase while the content of CO_2 decreases. It can be seen from Table 3, the simulated values of the model developed in this work are in an acceptable and reasonable range [29], which confirms the developed model is valid for calculating the syngas composition of plasma gasification. The main chemical reactions occurring during the PG are shown in Equations 1–8.

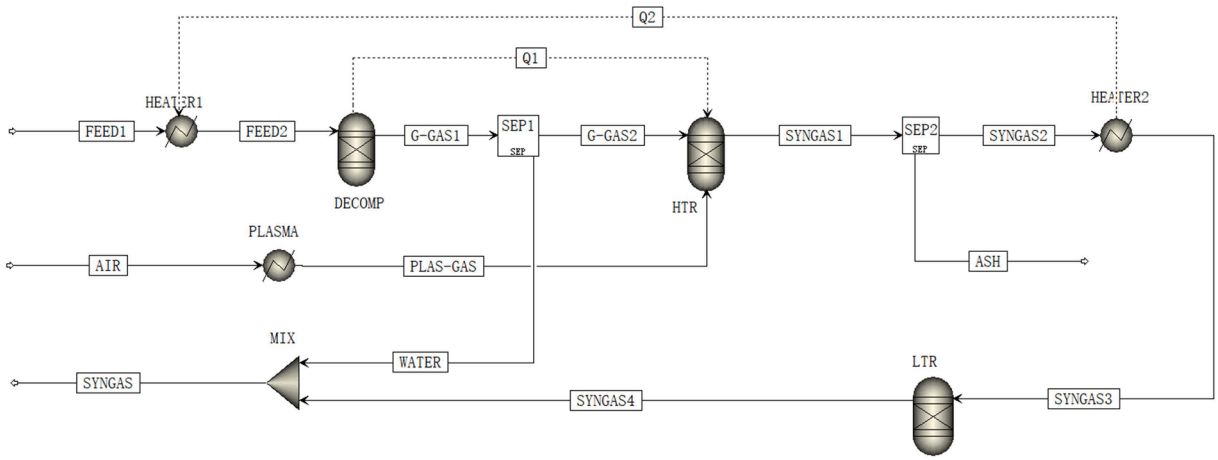

Fig. 3. Plasma gasfication process modeling.

Table 3
Simulation results of MSTH [9].

Component	Simulation (Composition v/v.%)	Experiment (Composition v/v.%)
H_2	15.03	13.19
CO	28.38	23.42
N_2	55.20	52.75
CO_2	0.93	8.72
H_2S	0.40	–

$$C + O_2 \leftrightarrow CO_2 \tag{1}$$

$$2C + O_2 \leftrightarrow 2CO \tag{2}$$

$$C + CO_2 \leftrightarrow 2CO \tag{3}$$

$$C + H_2O \leftrightarrow CO + H_2 \tag{4}$$

$$C + 2H_2O \leftrightarrow CO_2 + 2H_2 \tag{5}$$

$$CO + H_2O \leftrightarrow CO_2 + H_2 \tag{6}$$

$$CH_4 + H_2O \leftrightarrow CO + 3H_2 \tag{7}$$

$$C + 2H_2 \leftrightarrow CH_4 \tag{8}$$

2.1.2. H_2 production

For syngas from PG, CO must be converted into H_2. The water–gas shift reaction is shown in Equation 6. The kinetic equation of the reaction is provided in reference [30], and the RPlug module was used for the simulation.

Some unnecessary components, such as H_2S and CO_2, affect gas quality and downstream applications. Methanol at low temperatures has high solubility in many acidic gases, including CO_2 and H_2S. Therefore, AGR makes full use of the characteristics of methanol to remove acidic gases. Therefore, AGR was used to remove H_2S and a large amount of CO_2 from the syngas before PSA. CO_2 capture and syngas purification can also be achieved [31].

The purified syngas entered the PSA unit, and the impurity gases were adsorbed by the adsorbent under normal temperature and pressure conditions. It mainly included three processes: high-pressure adsorption, low-pressure desorption, and pressure increase [32]. First, the purified syngas entered from the bottom of the adsorption bed under high pressure, and CO, CO_2, CH_4, and other gases were adsorbed. The adsorbent was regenerated by desorption under low pressure, and the adsorbent bed was pressurized. The process was a physical process, and its operation was simple and stable. Hydrogen with a purity of 99.58% was obtained while separating various impurity gases.

2.2. Municipal sludge-to-H_2 by plasma gasification coupled with synthetic chemical looping process

MSTHCWSCL uses SCL to produce H_2 and capture CO_2 on the basis of PG. The flowsheet of MSTHCWSCL is shown in Fig. 4.

The crude syngas from PG entered the SCL unit, which included the fuel reactor (FR), steam reactor (SR), and air reactor (AR). The crude syngas was converted into H_2 in three steps. In this work, iron-based oxygen carriers (OCs) were selected to promote the reaction [33]. In addition, to provide more heat for the circulating reactor, inert Al_2O_3 was added to the system as an additional heat carrier. SiC was added as an inert support. According to Fan's suggestion [34], the mass fraction of solids recycled in the SCL system is 70% Fe_2O_3, 15% SiC, and 15% Al_2O_3 [35]. PR-BM was selected as the physical property method, and the simulation settings are listed in Table 4 [36].

The compressed crude syngas and OCs (Fe_2O_3) first entered the FR, where Fe_2O_3 was reduced by syngas (H_2 + CO) to FeO and Fe, and generated a mixture of CO_2 and steam. After the two-stage heat transfer, the medium pressure steam (MP) was obtained. Next, the water was liquefied and separated after cooling by a condenser. The CO_2 was captured. The main reaction equations are as follows:

$$Fe_2O_3 + CO \rightarrow 2FeO + CO_2 \tag{9}$$

$$FeO + CO \rightarrow Fe + CO_2 \tag{10}$$

$$Fe_2O_3 + H_2 \rightarrow 2FeO + H_2O \tag{11}$$

$$FeO + H_2 \rightarrow Fe + H_2O \tag{12}$$

$$4Fe_2O_3 + 3CH_4 \rightarrow 8Fe + 3CO_2 + 6H_2O \tag{13}$$

The reduction products FeO and Fe entered the SR together with steam to produce H_2, which was simultaneously oxidized to Fe_3O_4. H_2 and unreacted steam were transformed into low-temperature and low-pressure exhaust gases after power generation by the expander. After cooling by a condenser, the steam was liquefied and separated to obtain H_2. The purity of the H_2 was 99.9%. The main reaction equations are as follows:

$$Fe + H_2O_{(g)} \rightarrow FeO + H_2 \tag{14}$$

$$3FeO + H_2O_{(g)} \rightarrow Fe_3O_4 + H_2 \tag{15}$$

After separating H_2 and steam, Fe_3O_4 entered the AR, and air was introduced. Thus, Fe_3O_4 was oxidized to Fe_2O_3 and recycled to the FR for reuse. The unburned gas generated power through the expander and

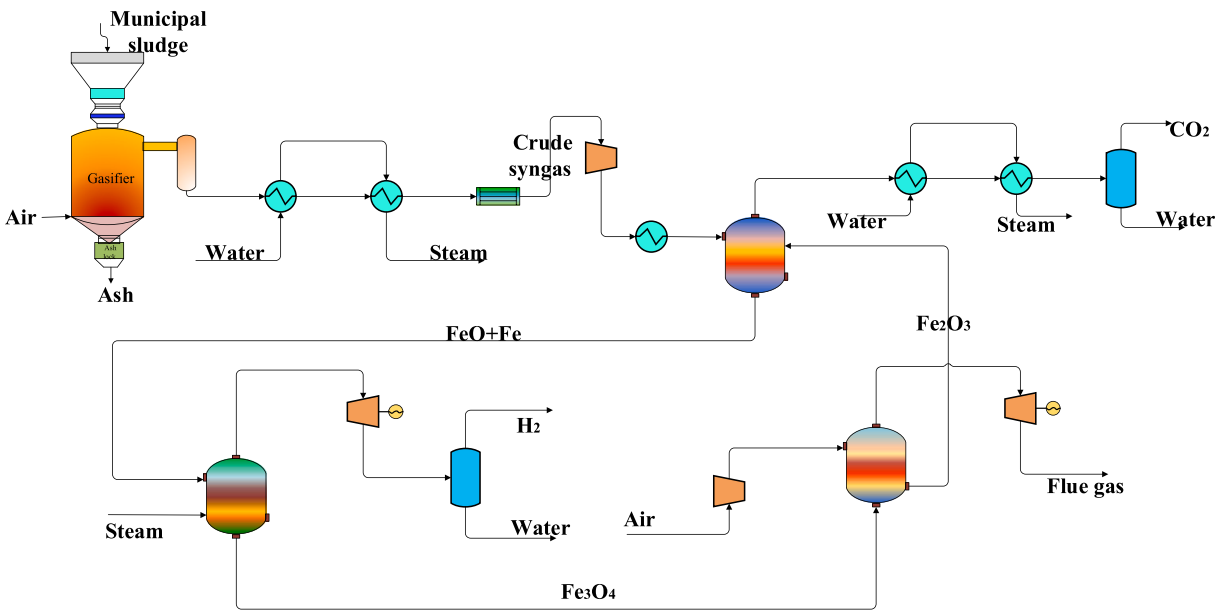

Fig. 4. Flowsheet of MSTHCWSCL.

Table 4
Specification of MSTHCWSCL.

Equipment	Main models	Key parameter
FR	RStoic	T = 920℃, p = 3.5 MPa
SR	RStoic	T = 815℃, p = 3.5 MPa
AR	RStoic	T = 1000℃, p = 3.7 MPa
Compressor	Compr	Isentropic efficiency 85% mechanical efficiency 99%
Pump	Pump	Pump efficiency 75%

then became a low-temperature and low-pressure exhaust gas, discharged as flue gas. The main reaction equation is as follows:

$$4Fe_3O_4 + O_2 \rightarrow 6Fe_2O_3 \tag{16}$$

2.3. Methods

To demonstrate the promising advantages of MSTH and MSTHCWSCL, exergy, economic, and environmental analyses were conducted in this study.

2.3.1. Exergy analysis

Exergy efficiency can be used to measure the effective utilization of a process. For a steady-state system, stream exergy primarily consists of physical exergy and chemical exergy [37]. The exergy calculation is defined as

$$\dot{E} = \dot{E}^{ph} + \dot{E}^{ch} \tag{17}$$

$$\dot{E}^{ph} = \dot{m}[(h_i - h_0) - T_0(s_i - s_0)] \tag{18}$$

The chemical exergy can be calculated by Formula 19.

$$\dot{E}^{ch} = \sum z_i e_i \tag{19}$$

In addition, the $\dot{E}^{ch}$ of a mixture gas can be calculated as

$$\dot{E}^{ch} = RT_0 \sum z_i ln z_i + \sum z_i \dot{E}^{ch}_{0,i} \tag{20}$$

where R is a constant of the equation of the state of the gas, which is equal to 8.314 kJ/kmol/K; the information on standard chemical exergy $\dot{E}^{ch}_{0,i}$ is in Table S1 [38] in the Supporting Information.

Solid fuel only considers chemical exergy. Therefore, Formula 21 was used to estimate the chemical exergy of dry municipal sludge [39].

$$\dot{E}_{Biomass} = 363.439\omega(C) + 1075.633\omega(H) - 86.308\omega(O) + 4.417\omega(N) + 190.788\omega(S) - 21.1\omega(Ash) \tag{21}$$

where $\omega(C)$, $\omega(H)$, $\omega(O)$, $\omega(N)$, $\omega(S)$, and $\omega(Ash)$ are the mass fractions of the dried municipal sludge C, H, O, N, S, and ash, respectively.

The destruction and exergy balance of the kth block can be calculated using Formulas 22–24.

$$\dot{E}_{D,k} = T_0 S_{gen,k} = T_0 \dot{m}_k S_{gen,k} \tag{22}$$

$$\dot{E}_{D,k} = \dot{E}_{F,k} - \dot{E}_{P,k} - \dot{E}_{bP,k} \tag{23}$$

$$\dot{E}_{F,tot} = \dot{E}_{P,tot} + \sum_k \dot{E}_{D,k} + \dot{E}_{bP,tot} \tag{24}$$

Exergy efficiency$\dot{\varepsilon}_k$ is defined as

$$\dot{\varepsilon}_k = \frac{\dot{E}_{P,k}}{\dot{E}_{F,k}} = 1 - \frac{\dot{E}_{D,k}}{\dot{E}_{F,k}} \tag{25}$$

Exergy destruction ratio $\dot{y}_k$ is defined as

$$\dot{y}_k = \frac{\dot{E}_{D,k}}{\dot{E}_{F,tot}} \tag{26}$$

2.3.2. Economic analysis

The goal of a chemical process design is to earn profits, and techno-economic evaluation is important in process design.

The consumption of raw materials has a significant impact on production costs. It is defined as the ratio of municipal sludge to product H_2, which is calculated using Formula 27:

$$\eta = \frac{m_{\text{municipal sludge}}}{m_{H_2}} \tag{27}$$

where $m_{\text{municipal sludge}}$ is the mass of municipal sludge consumed, and m_{H_2} is the mass of product H_2.

Equipment investment (EI) is used to purchase equipment, tools, and appliances. This aspect is an important aspect of capital investment. According to the basic data of equipment investment and scale factor in Tables S2, S3, and S4 (Supporting Information), the EI and total cost

investment (TCI) calculations are shown in Formulas 28 and 29 [40]:

$$C_E = C_B\left(\frac{Q}{Q_B}\right)^M f_M f_P f_T \tag{28}$$

$$TCI = C_E \bullet \left(1 + \sum_j \mathrm{RF_i}\right) \tag{29}$$

Where C_B represents the equipment of the reference project; Q_B represents the scale of the reference project; C_E represents the equipment investment of the studied project; Q represents the scale of the studied project; and M is the scale exponent; f_M is correction factor for materials of construction; f_p is correction factor for design pressure; f_T is correction factor for design temperature; i represents the components of the investment, and RF represents the ratio factor.

Product cost (PC) refers to all types of expenses for production and management in the production process, mainly including raw materials, utilities, wages of workers, and various manufacturing expenses. Table S5 (Supporting Information) shows the PC estimation assessment of unit H_2 based on MSTH and MSTHCWSCL [41]. The calculation is shown in Eq. 30.

$$PC = C_R + C_U + C_{O\&M} + C_D + C_{POC} + C_{AC} + C_{DSC} \tag{30}$$

The financial internal rate of return (FIRR) is a dynamic index reflecting the actual rate of return of a project. Generally, when the FIRR is greater than or equal to 30% [42], the project can be considered to have application potential [43].

$$\sum_{t=0}^{n} (CI - CO)_t (1 + FIRR)^{-1} = 0 \tag{31}$$

where *CI* is the net present value of profit, *CO* is the net present value of the investment, $(CI - CO)_t$ is the net cash flow of period t, and n is the calculation period of the project.

FIRR is usually solved iteratively by the secant method, and the calculation is shown in Formula 32 [44]:

$$FIRR = i_1 + (i_2 - i_1)\frac{FNPV_1}{FNPV_1 - FNPV_2} \tag{32}$$

where i_1 and i_2 represent discount rate, $FNPV_1$ represents financial net present value corresponding to i_1, $FNPV_2$ represents financial net present value corresponding to i_2.

2.3.3. Environmental analysis

Process design involves the impact of greenhouse gas and acid gas emissions on the environment. The emission reduction potential of the system was assessed using the global warming potential (GWP, calculated as CO_2) index. The environmental synergistic impact of the system was evaluated based on the acidification potential (AP, calculated as SO_2). The calculation formulas are as follows:

$$GWP = \sum_{i=1}^{n} ISGW_i = \sum_{i=1}^{n} EFGWP_i \times AMTGG_i \tag{33}$$

where $ISGW_i$ is the GWP of greenhouse gas i, $EFGWP_i$ is the GWP correlation coefficient of i, and $AMTGG_i$ is the inventory analysis emission of i.

$$AP = \sum_{i=1}^{n} ISAP_i = \sum_{i=1}^{n} EPAP_i \times AMTAP_i \tag{34}$$

where $ISAP_i$ is the AP of substance i, $EPAP_i$ is the AP correlation coefficient of i, and $AMTAP_i$ is the inventory analysis emission of i.

3. Results and discussion

Based on the simulation results, an evaluation of thermodynamic efficiency, economic benefits, and environmental impact performance metrics was conducted for MSTH and MSTHCWSCL.

3.1. Thermodynamic efficiency

Exergy analysis considers both the quality and quantity of energy and is more accurate and reliable than energy analysis. On the basis of the simulation results and the exergy analysis, the process is discussed. The simulation results are presented in Tables 5 and 6, respectively.

Fig. 5 shows that the input exergy of municipal sludge was 76.49 MW, and the input exergy of the utility of PG was 4.11. After gasification, the output exergy of crude syngas was 60.36 MW, and the steam output exergy was 7.06. The exergy efficiency of PG was 83.65%, and the exergy destruction was 13.18. The exergy destruction of the unit was primarily caused by the high-temperature operation of the gasifier, the irreversibility of the chemical reaction, and the large consumption of utility.

The total input exergy of the WGS was 62.93 MW, and the exergy destruction was 3.12. The exergy destruction caused by the irreversibility of the reaction process can be reduced by increasing the amount of steam balance to shift the heat of the reaction process. The exergy destruction can also be reduced by increasing the conversion of CO to increase the outlet gas temperature. The input exergy of AGR was 64.94 MW, and the output exergy included 50.51 MW purified syngas, 1.65 MW H_2S, 4.28 MW CO_2, and 10.18 MW exergy destruction. The exergy efficiency was 86.91%, and the exergy destruction was primarily caused by the large amount of cold energy required in the process. This can be achieved by adding a refrigeration unit to reduce the exergy destruction of the process, such as an absorption refrigeration cycle driven by low-grade waste heat. The exergy efficiency of the PSA unit was 95.03%, and the output exergy of H_2 was 49.77. The exergy destruction was 2.59 MW and was primarily caused by the pressure change during the adsorption process.

The total input exergy of the MSTH process was 88.77 MW, the total exergy destruction was 29.07 MW, and the total exergy efficiency was 67.26%.

According to Table 6 and Fig. 6, the crude syngas from the PG input to the FR had an input exergy of 60.36. The OCs in FR were reduced to FeO and Fe with an exergy of 55.56 MW, and the syngas was oxidized to CO_2 and steam with an exergy of 16.69. The exergy destruction due to the irreversibility of the reaction was 3.41. The reduced syngas with higher temperature and it produced MP with an exergy of 6.64 MW through the waste heat boiler (WHB), part of which (5.31 MW) was used in the SR, and the exergy of the remaining steam was 1.33 MW. After cooling in the WHB, the exergy of the reduced syngas was 8.91 MW, and it entered the condenser for cooling and condensation to liquefy and separate the water. Further separation to obtain CO_2 with an exergy of 4.30 MW was required to realize CO_2 capture. During the process, the exergy destruction of the WHB was 1.37 MW and was primarily caused by the large heat transfer temperature difference and the phase change of water. Second, the exergy destruction of the condenser includes the destruction caused by condensate water and the destruction caused by the condensation of CO_2, whose values were 0.06 MW and 1.31 MW -respectively.

The input exergy to SR included 55.56 FeO and Fe, and 5.31 steam. After the reaction, the output exergy included 13.05 MW of Fe_3O_4 and 44.37 MW of H_2 rich gas, and the exergy destruction was 1.44. The gas rich in H_2 could produce 3.29 power through the expander, and the temperature of the gas was reduced. After the water was separated, 42.17 high-purity H_2 was obtained. Fe_3O_4 with exergy of 13.05 MW and air with exergy of 0.41 MW were simultaneously fed into the AR. After the completion of the reaction, the Fe_2O_3 recycled SR with an exergy of 13.86 MW was separated, accompanied by the output of solid waste with an exergy of 0.08. The high-temperature gas produced 1.98 electricity through the expander. It was accompanied by the output of flue gas with an exergy of 0.41.

Table 5
Simulation results of MSTH.

Stream		Biomass	Crude syngas	Shifted syngas	Pure syngas	H_2
Temperature	℃	25	250	250	−47.05	−47.01
Pressure	bar	1	30	30	30	30
Mole flows	kmol/hr		1704.07	2264.58	1677.18	734.77
H_2O	kmol/hr		0.50	78.61		
N_2	kmol/hr		941.00	941.00	930.60	2.79
H_2	kmol/hr		256.18	737.57	731.69	731.69
CO	kmol/hr		483.92	2.53	2.50	0.05
CO_2	kmol/hr		15.73	497.63	12.34	0.25
H_2S	kmol/hr		6.74	7.25		
CH_3OH	kmol/hr				0.07	
Mass flows	kg/hr	15000.00	41393.64	51482.19	28159.31	1565.46
Sum exergy	MW	76.49	60.36	59.81	50.51	49.77

Table 6
Simulation results of MSTHCWSCL.

Stream		Biomass	Crude syngas	CO_2 rich gas	CO_2	FeO and Fe	H_2 rich gas	H_2	Fe_3O_4	Fe_2O_3
Temperature	℃	25	250	920	−80	920	815	241.55	815	1000
Pressure	bar	1	30	35	35	35	35	1	35	37
Mole flows	kmol/h		1704.07	2457.91	499.18	761.16	680.62	612.37	254.35	378.88
H_2O	kmol/h		0.50	256.06			68.26	0.55		
N_2	kmol/h		941.00	941.00						
H_2	kmol/h		256.18	492.80	499.18	0.62	612.37	611.81		
CO	kmol/h		483.92			0.47			0.47	
CO_2	kmol/h		15.73	499.18						
H_2S	kmol/h		6.74			0.07			0.07	
Fe	kmol/h					359.01			0.36	
FeO	kmol/h					401.00			0.36	
Fe_2O_3	kmol/h									378.88
Fe_3O_4	kmol/h								253.09	
Mass flows	kg/h	15,000	41393.64	52942.56	21969.00	48906.70	2464.16	1223.62	58692.93	60504.51
Sum exergy	MW	76.49	60.36	16.69	4.30	55.56	44.37	42.17	13.05	13.86

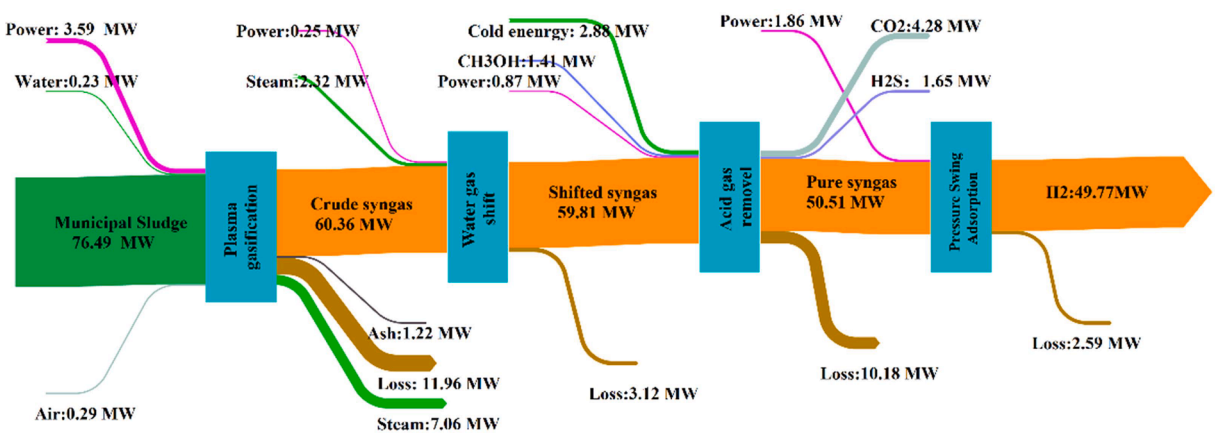

Fig. 5. Exergy flow of MSTH.

The total input exergy of the MSTHCWSCL process was 81.68 MW, the total exergy destruction was 21.02 MW, and the total exergy efficiency was 74.24%. The main exergy destruction occurred in PG, followed by the syngas reduction stage and steam production process in the WHB.

3.2. Economic benefit

On the basis of the simulation data, this work used the raw material consumption, EI, TCI, PC, and financial internal rate of return (FTRR) as evaluation indexes to conduct an economic analysis of MSTH.

3.2.1. Raw material consumption

In this work, air was used as the gasification agent, and municipal sludge was used as the raw material to produce H_2. The raw material consumption of MSTH was 9.58 t/t H_2. The raw material consumption of MSTHCWSCL was 12.16 t/t H_2.

3.2.2. Equipment investment

The EI of MSTH and MSTHCWSCL were 6.80×10^6 USD and 6.41×10^6 USD, respectively. The TCI of MSTH and MSTHCWSCL were 27.61×10^6 USD and 26.03×10^6 USD, respectively. The results are shown in Fig. 7. The main reason why the EI and TCI of MSTHCWSCL were smaller than those of MSTH is that there were no WGS, AGS, and PSA.

3.2.3. Production cost

Because municipal sludge is part of MSW, the cost of raw materials was not considered in this work. The PC of MSTH and MSTHCWCSCL

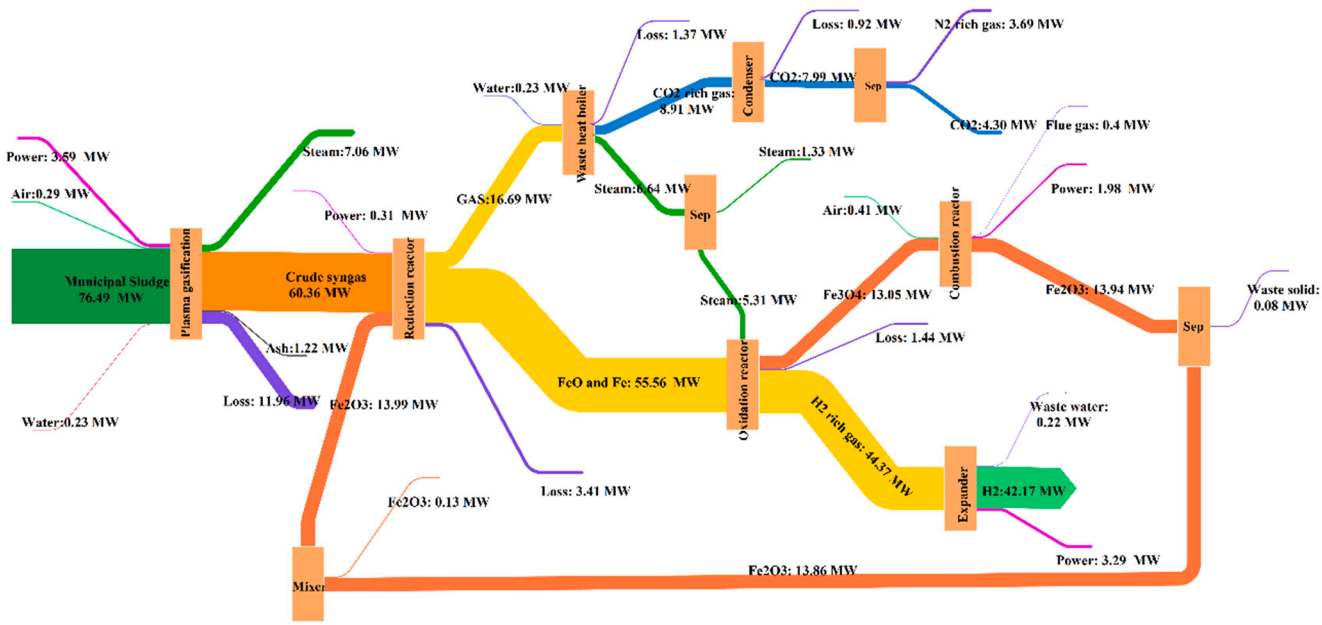

Fig. 6. Exergy flow of MSTHCWSCL.

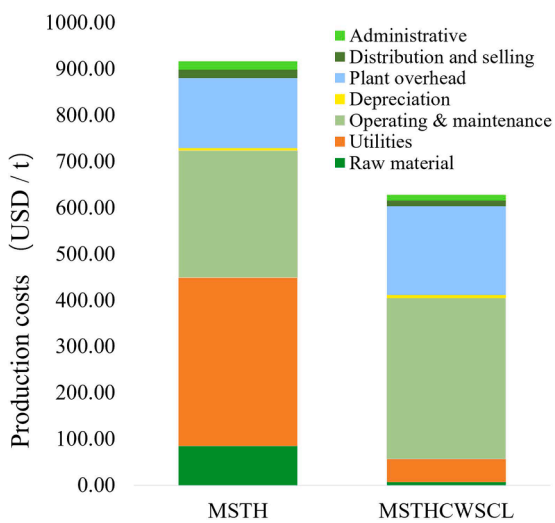

Fig. 7. Production cost ratio of unit H_2 for MSTH and MSTHCWSCL.

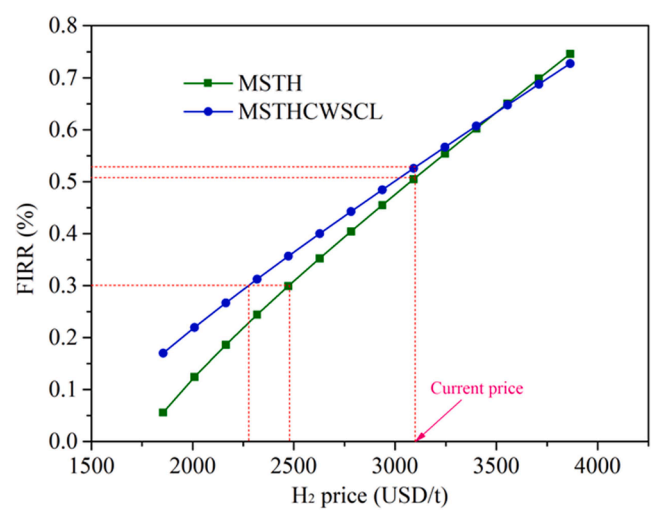

Fig. 8. Sensitive analysis of H_2 price.

was 917.00 USD/t and 628.23 USD/t after calculation, respectively. In Fig. 7, utility accounted for a large proportion of MSTH, mainly because of the electricity consumption of the plasma gasifier. In MSTHCWSCL, the high-temperature gas produced by SCL was used to generate power, reducing the electricity cost. Second, the operating and maintenance costs were a large proportion of the total costs in MSTH and MSTHCWSCL. This part of the expenditure is the inevitable production expenditure. If the automation of the plant can be realized, the cost can be reduced, but the corresponding other costs will increase.

3.2.4. Financial internal rate of return

Product price analysis can evaluate the economic performance of factories. The price of H_2 fluctuates significantly with the consumption of H_2. The main factors that affect the price of H_2 are, for example, market supply and demand, national policies, product costs, and alternative energy prices. This work analyzed the sensitivity relationship between different prices of H_2 and FIRR (Fig. 8). For MSTH, when the H_2 price was more than 2470.19 USD/t, the project was feasible. At present, the price of H_2 is generally more than 3091.19 USD/t, calculated as USD 3091.19/t [45], and the FIRR of the project was 50.29%. For MSTHCWSCL, when the H_2 price was more than 2273.64 USD/t, the project was feasible. The FIRR of the project was 52.71% when H_2 was calculated as 3091.19 USD/t. With the increasing price of H_2, the FIRR of both processes will continues to increase, but the increase in MSTH is greater than that of MSTHCWSCL. When the H_2 price was 3488.55 USD/t, the FIRRs of the two processes were equal. When the H_2 price is greater than 3488.55 USD/t, the MSTH process will show a better economy.

3.3. Environmental impact

This study adopted the CML 2001 life cycle assessment method developed by the Institute of environmental science, Leiden University. In addition, some related basic academic data from Gabi 9.2 software database independently developed in Germany were used to systematically analyze the environment MSTH and MSTHCWSCL.

In Fig. 9, the impact of MSTHCWSCL on the environment is much lesser than that of MSTH. The primary reason for this difference in emissions is the different path of the H_2 production process. The AP and

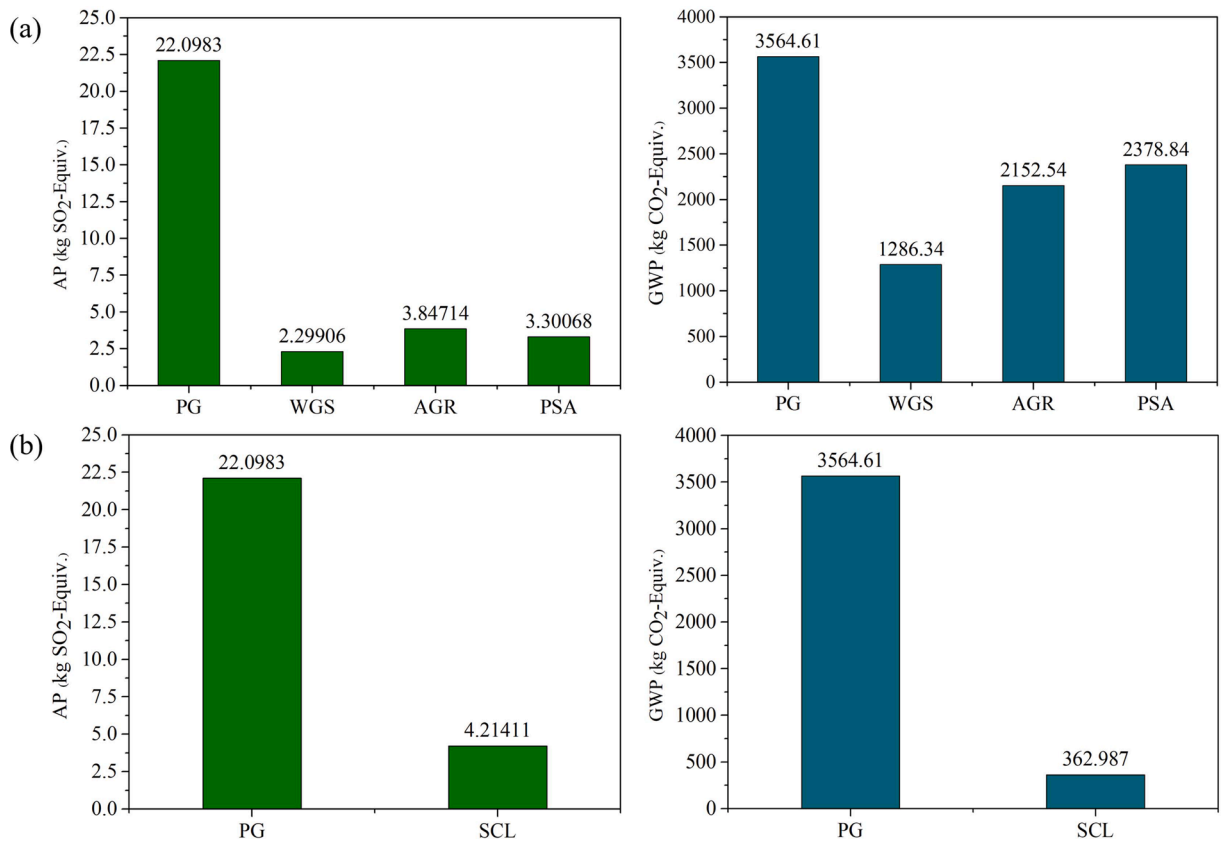

Fig. 9. Environmental impact of a process (a. AP and GWP of MSTH; b. AP and GWP of MSTHCWSCL.).

GWP of the traditional H_2 production process were 55.39% and 93.76% higher than that of SCL, respectively. The high emission of MSTH was due to the large consumption of utilities in the WGS and AGR. Part of the CO_2 and acid gas directly discharged in the PSA was also a reason for the high emission. Therefore, SCL is environmentally friendly for the preparation of H_2. Overall, the emission caused by the electricity consumption of the gasification unit was the main factor affecting the whole process environment emission, and its AP accounted for 70.05% and 83.98% of the MSTH and MSTHCWSCL processes' emissions, respectively. GWP accounted for 37.99% and 90.76% of the MSTH and MSTHCWSCL processes' emissions, respectively. Therefore, to reduce environmental pollution and conform to the low-carbon theme, in addition to considering the use of advanced H_2 production processes, further research is necessary to explore the energy integration process to reduce the environmental pollution caused by the utility consumption of gasification units.

4. Conclusion

In this work, MSTH and MSTHCWSCL were proposed for the treatment of municipal sludge. Based on the simulation results, the exergy efficiency, economic benefits, and environmental impact of these processes were compared. The primary conclusions are as follows:

(1) The exergy efficiencies of MSTH and MSTHCWSCL were 67.26% and 74.24%, respectively. The exergy efficiency of MSTHCWSCL was 6.98% higher than that of MSTH.
(2) MSTH had a higher production capacity than MSTHCWSCL, and the raw material consumption was 9.58 t/t H_2 and 12.16 t/t H_2, respectively.
(3) The unit PC of MSTH was 31.49% higher than that of MSTHCWSCL, due to the large difference in the consumption of utilities. However, the complexity difference led to a 5.73% higher TCI for MSTH than MSTHCWSCL.
(4) FIRR analysis results showed that at the current H_2 price, the FIRR of MSTH and MSTHCWSCL was 50.29% and 52.71%, respectively. Nevertheless, because the price of H_2 continuously increased, the FIRR of MSTH exceeded that of MSTHCWSCL.
(5) Both novel processes have little environmental impact. However, in terms of comparative results, MSTHCWSCL has 16.59% and 58.14% lower AP and GWP emissions than MSTH, respectively.

The results show that MSTH and MSTHCWSCL can convert municipal sludge into H_2, which can effectively solve the problem of environmental pollution and alleviate the energy shortage. This study provides theoretical guidance for pilot-scale treatment plants and the industrial applications of PG technology. Additionally, more energy-saving improvement methods and the full lifecycle of MSTH and MSTHCWSCL should be explored in further research.

CRediT authorship contribution statement

Huaqing Qi: Conceptualization, Methodology, Investigation, Writing - original draft. **Peizhe Cui:** Writing - review & editing. **Zhiqiang Liu:** Writing - review & editing. **Zaifeng Xu:** Validation, Data curation, Visualization, Software, Writing - review & editing. **Dong Yao:** Visualization, Formal analysis. **Yinglong Wang:** Writing - review & editing. **Zhaoyou Zhu:** Resources, Supervision, Writing - review & editing. **Sheng Yang:** Resources, Supervision, Writing - review & editing.

Declaration of Competing Interest

The authors declare that they have no known competing financial interests or personal relationships that could have appeared to influence

the work reported in this paper.

Acknowledgements

This work was supported by the National Natural Science Foundation of China (No. 21808117 and 22008265) Laboratory of Low-Carbon Conversion Science &Engineering, Shanghai Advanced Research Institute, Chinese Academy of Sciences (Grant No. KLLCCSE-201907, SARI, CAS).

Appendix A. Supplementary data

Supplementary data to this article can be found online at https://doi.org/10.1016/j.enconman.2021.114635.

References

[1] Cen S, Li K, Liu Q, Jiang Y. Solar energy-based hydrogen production and post-firing in a biomass fueled gas turbine for power generation enhancement and carbon dioxide emission reduction. Energ Convers Manage 2021;233.
[2] Wan L, Xu Z, Wang P, Lin Y, Wang B. H2SO4-doped polybenzimidazole membranes for hydrogen production with acid-alkaline amphoteric water electrolysis. J Membr Sci 2021;618.
[3] Mphahlele K, Matjie RH, Osifo PO. Thermodynamics, kinetics and thermal decomposition characteristics of sewage sludge during slow pyrolysis. J Environ Manage 2021;284.
[4] Werle S, Sobek S. Gasification of sewage sludge within a circular economy perspective: a Polish case study. Environ Sci Pollut R 2019;26(35):35422–32.
[5] Samolada MC, Zabaniotou AA. Comparative assessment of municipal sewage sludge incineration, gasification and pyrolysis for a sustainable sludge-to-energy management in Greece. Waste Manage 2014;34(2):411–20.
[6] Janajreh I, Adeyemi I, Raza SS, Ghenai C. 2020. A review of recent developments and future prospects in gasification systems and their modeling. Renew Sust Energ Rev 110505.
[7] Jiang P, Parvez AM, Meng Y, Dong X, Xu M, Luo X, Wu T. Novel two-stage fluidized bed-plasma gasification integrated with SOFC and chemical looping combustion for the high efficiency power generation from MSW: A thermodynamic investigation. Energ Convers Manage 2021;236.
[8] Karbakhshravari M, Abeysiriwardana-Arachchige IS, Henkanatte-Gedera SM, Cheng F, Papelis C, Brewer CE, Nirmalakhandan N. Recovery of struvite from hydrothermally processed algal biomass cultivated in urban wastewaters. Resour Conserv Recy 2020;163.
[9] Striūgas N, Valinčius V, Pedišius N, Poškas R, Zakarauskas K. Investigation of sewage sludge treatment using air plasma assisted gasification. Waste Manage 2017;64:149–60.
[10] Lumley NP, Ramey DF, Prieto AL, Braun RJ, Cath TY, Porter JM. Techno-economic analysis of wastewater sludge gasification: a decentralized urban perspective. Bioresour Technol 2014;161:385–94.
[11] Wang M, Mao M, Zhang M, Wen G, Yang Q, Su B, Ren Q. Highly efficient treatment of textile dyeing sludge by CO2 thermal plasma gasification. Waste Manage 2019;90:29–36.
[12] Munir MT, Mardon I, Al-Zuhair S, Shawabkeh A, Saqib NU. Plasma gasification of municipal solid waste for waste-to-value processing. Renew Sust Energ Rev 2019;116.
[13] Diaz G, Sharma N, Leal-Quiros E, Munoz-Hernandez A. Enhanced hydrogen production using steam plasma processing of biomass: Experimental apparatus and procedure. Int J Hydrogen. Energ 2015;40(5):2091–8.
[14] Cho SH, Cho EB, Lee JH, Moon DH, Jung S, Kwon EE. Synergistic benefits for hydrogen production through CO2-cofeeding catalytic pyrolysis of cellulosic biomass waste. Cellulose 2021:1–12.
[15] Mazzoni L, Almazrouei M, Ghenai C, Janajreh I. A comparison of energy recovery from MSW through plasma gasification and entrained flow gasification. Energy Procedia 2017;142:3480–5.
[16] Khuriati A, Purwanto P, Huboyo HS, Suryono S, Putro AB. Application of aspen plus for municipal solid waste plasma gasification simulation: case study of jatibarang landfill in Semarang Indonesia. J Phys Conference Series 2018:1025.
[17] Cho IJ, Park HW, Park DW, Choi S. Enhancement of synthesis gas production using gasification-plasma hybrid system. Int J Hydrogen Energy 2015;40(4):1709–16.
[18] Minutillo M, Perna A, Di Bona D. Modelling and performance analysis of an integrated plasma gasification combined cycle (IPGCC) power plant. Energ Convers Manage 2009;50(11):2837–42.
[19] Xiang D, Li P, Yuan X, Cui P, Huang W. Highly efficient carbon utilization of coal-to-methanol process integrated with chemical looping hydrogen and air separation technology: Process modeling and parameter optimization. J Clean Prod 2020;258.
[20] Zhou H, Meng W, Wang D, Li G, Li H, Liu Z, Yang S. A novel coal chemical looping gasification scheme for synthetic natural gas with low energy consumption for CO2 capture: modelling, parameters optimization, and performance analysis. Energy 2021;225.
[21] Darmawan A, Ajiwibowo MW, Biddinika MK, Tokimatsu K, Aziz M. Black liquor-based hydrogen and power co-production: Combination of supercritical water gasification and syngas chemical looping. Appl Energ 2019;252.
[22] Hsieh TL, Xu D, Zhang Y, Nadgouda S, Wang D, Chung C, Tong A. 250 kWth high pressure pilot demonstration of the syngas chemical looping system for high purity H2 production with CO2 capture. Appl Energ 2018;230:1660–72.
[23] Wang S, Yin W, Li Z, Yang X, Zhang K. Numerical investigation of chemical looping gasification process using solid fuels for syngas production. Energ Convers Manage 2018;173:296–302.
[24] Jin J, Liu S, Gao Y, Liu R, Huang W, Wang L, Zheng J. Fabrication of cooling asphalt pavement by novel material and its thermodynamics model. Constr Build Mater 2021;272.
[25] Messerle VE, Mosse AL, Ustimenko AB. Processing of biomedical waste in plasma gasifier. Waste Manage 2018;79:791–9.
[26] Miller KK, Gottfried JL, Walck SD, Pantoya ML, Wu CC. Plasma surface treatment of aluminum nanoparticles for energetic material applications. Combust Flame 2019;206:211–3.
[27] Janajreh I, Raza SS, Valmundsson AS. Plasma gasification process: Modeling, simulation and comparison with conventional air gasification. Energ Convers Manage 2013;65:801–9.
[28] Huang YW, Chen MQ, Li QH, Xing W. Hydrogen-rich syngas produced from co-gasification of wet sewage sludge and torrefied biomass in self-generated steam agent. Energy 2018;161:202–13.
[29] Xiao G, Ni MJ, Chi Y, Jin BS, Xiao R, Zhong ZP, Huang YJ. Gasification characteristics of MSW and an ANN prediction model. Waste Manage 2009;29(1):240–4.
[30] Zhonghuanlianxin Environmental Protection Inc., Environmental impact report on the Xintian Yili 20×108 m3/y coal-to-SNG project, 2016.
[31] Yang S, Qian Y, Yang S. Development of a Full CO2 Capture process based on the rectisol wash technology. Ind Eng Chem Res 2016;55(21):6186–93.
[32] Wang Y, Li G, Liu Z, Cui P, Zhu Z, Yang S. Techno-economic analysis of biomass-to-hydrogen process in comparison with coal-to-hydrogen process. Energy 2019;185:1063–75.
[33] Mukherjee S, Kumar P, Yang A, Fennell P. A systematic investigation of the performance of copper-, cobalt-, iron-, manganese-and nickel-based oxygen carriers for chemical looping combustion technology through simulation models. Chem Eng Sci 2015;130:79–91.
[34] Fan LS. Chemical looping systems for fossil energy conversions. John Wiley Sons; 2011.
[35] Ahmed I, de Lasa H. Syngas chemical looping combustion using a highly performing fluidizable oxygen carrier. Catal Today 2020;343:63–71.
[36] Zaini IN, Nurdiawati A, Aziz M. Cogeneration of power and H2 by steam gasification and syngas chemical looping of macroalgae. Appl Energ 2017;207:134–45.
[37] Yu M, Cui P, Wang Y, Liu Z, Zhu Z, Yang S. Advanced exergy and exergoeconomic analysis of cascade absorption refrigeration system driven by low-grade waste heat. Acs Sustain Chem Eng 2019;7(19):16843–57.
[38] Li G, Liu Z, Liu F, Yang B, Ma S, Weng Y, Fang Y. Advanced exergy analysis of ash agglomerating fluidized bed gasification. Energ Convers Manage 2019;199.
[39] Song G, Chen L, Xiao J, Shen L. Exergy evaluation of biomass steam gasification via interconnected fluidized beds. Int J Energ Res 2013;37(14):1743–51.
[40] Ahmed U. Techno-economic feasibility of methanol synthesis using dual fuel system in a parallel process design configuration with control on greenhouse gas emissions. Int J Hydrogen Energ 2020;45(11):6278–90.
[41] Chisalita DA, Cormos CC. Techno-economic assessment of hydrogen production processes based on various natural gas chemical looping systems with carbon capture. Energy 2019;181:331–44.
[42] Zhao F, Yang X, Li G, Wang Y, Zhu Z, Ma Y, Cui P. Batch-to-continuous process design and economic, energy, exergy, and environmental analyses of Claisen ester condensation based on diethyl 2-ethyl-2-phenylmalonate synthesis. J Clean Prod 2020;251.
[43] Wang J, Chai Y, Shao Y, Qian X. Techno-economic Assessment of Biogas Project: a Longitudinal Case Study from Japan. Resour Conserv Recy 2021;164.
[44] Liu X, Liang J, Xiang D, Yang S, Qian Y. A proposed coal-to-methanol process with CO2 capture combined Organic Rankine Cycle (ORC) for waste heat recovery. J Clean Prod 2016;129:53–64.
[45] Li G, Chang Y, Liu T, Yu Z, Liu Z, Liu F, Zhang Y. Hydrogen element flow and economic analyses of a coal direct chemical looping hydrogen generation process. Energy 2020;206.